Rev	Note	CreatedBy	Appr.By	Appr.Date
A	Initial release	FG	AE	2020-05-27

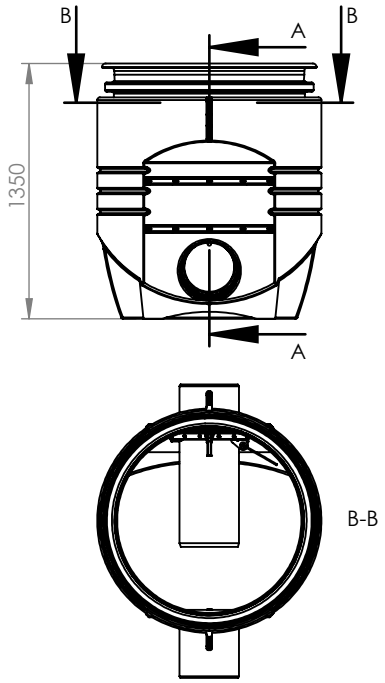

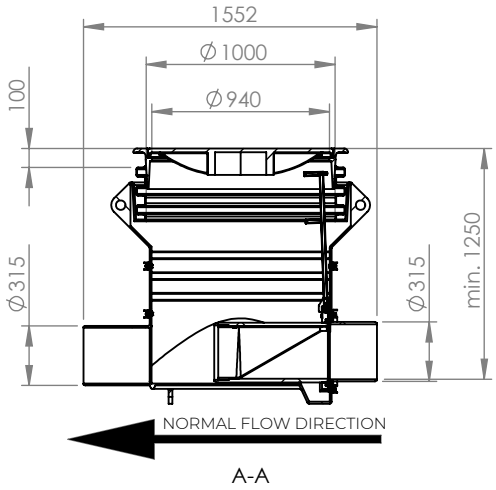

Alternativ 1:
- DN1000 stigarrör m. betäckning
- min. VG-FM 1250mm

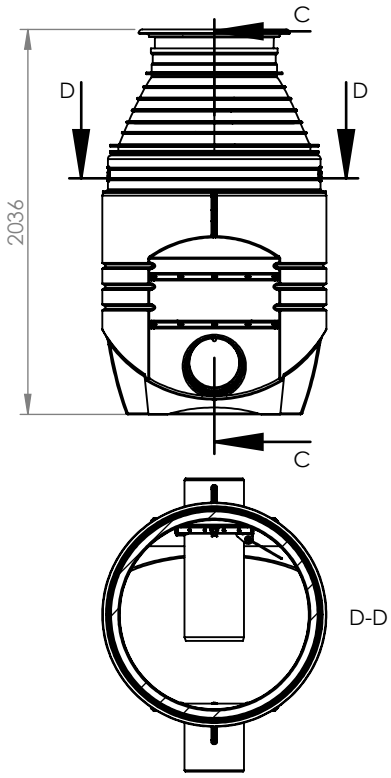

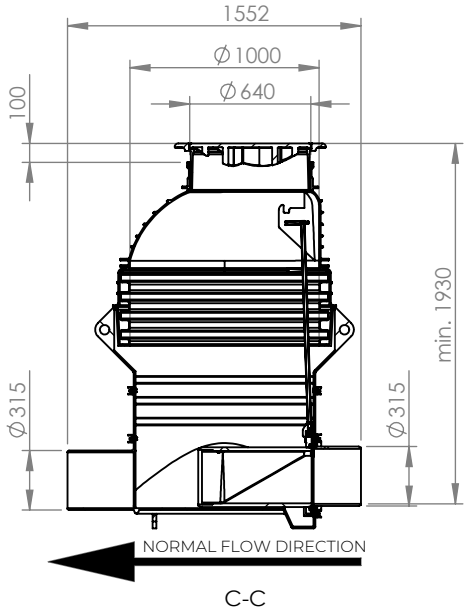

Alternativ 2:
- DN1000 stigarrör m. kona och betäckning
- min. VG-FM 1930mm

Designed By	Approved By	Created Date	Units	General Tolerance	Scale
FG	AE	2020-05-27	[mm]	SS-ISO 2768-1 m	1:40

Material	Project	Comments
PE, PVC, EN1.4301, MVQ		

Weight [kg]	Box Volume [m³]
371.7	

Description

WaStop Access Large DN315

Stigarrör DN1000 m. betäckning alt. stigarrör med kona

www.wapro.com

Article Number	Drawing Number	Rev	Sheet
WS315-WA1000-S	ws315-wa1000-en	A	1 (1)

© 2018 Wapro AB. This document is subject to copyrights owned by Wapro AB. Any amendments, republication, retransmission, and/or reproduction of all or any part of the document is expressly prohibited, unless the copyright owner of the material has expressly granted it's prior written consent. All other rights are reserved.